DRG.No.	183-200
USED ON	
DEV	

DRAWN TO B.S. 8888

THIRD ANGLE PROJECTION

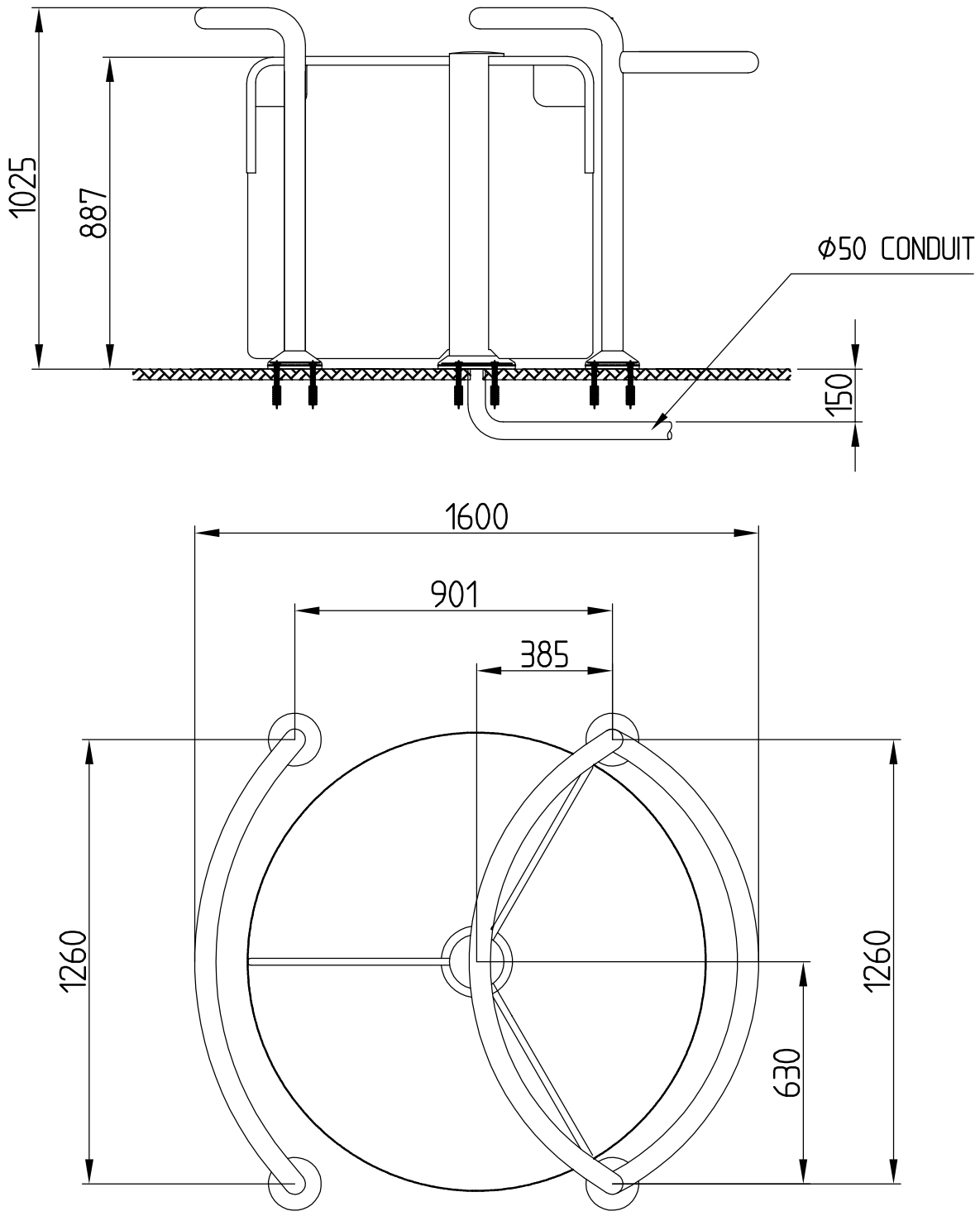

-	-	-			
A	28.01.04	-			
ISSUE	DATE	CHANGE NOTE			
DRAWN	M.KEADY	CHECKED	CERTD.	SCALE	N.T.S

PROTECTIVE FINISH
-

TOLERANCES FOR DIMENSIONS
DIMS. SHOWN THUS >449 ±1
DIMS. SHOWN THUS 1. ±0.4
DIMS. SHOWN THUS 1.0 ±0.15
DIMS. SHOWN THUS 1.00 ±0.05
UNLESS OTHERWISE STATED
ALL DIMENSIONS IN MILLIMETRES

MATERIAL
-

STORES REF. -

Clarke Instruments Ltd.

TITLE
THE OPUS LAYOUT DETAILS

DRG.No. A3
183-200

29/07/2004 14:00:07, mike