DRG.No.	184-200
USED ON	
-	

DRAWN TO B.S. 8888

THIRD ANGLE PROJECTION

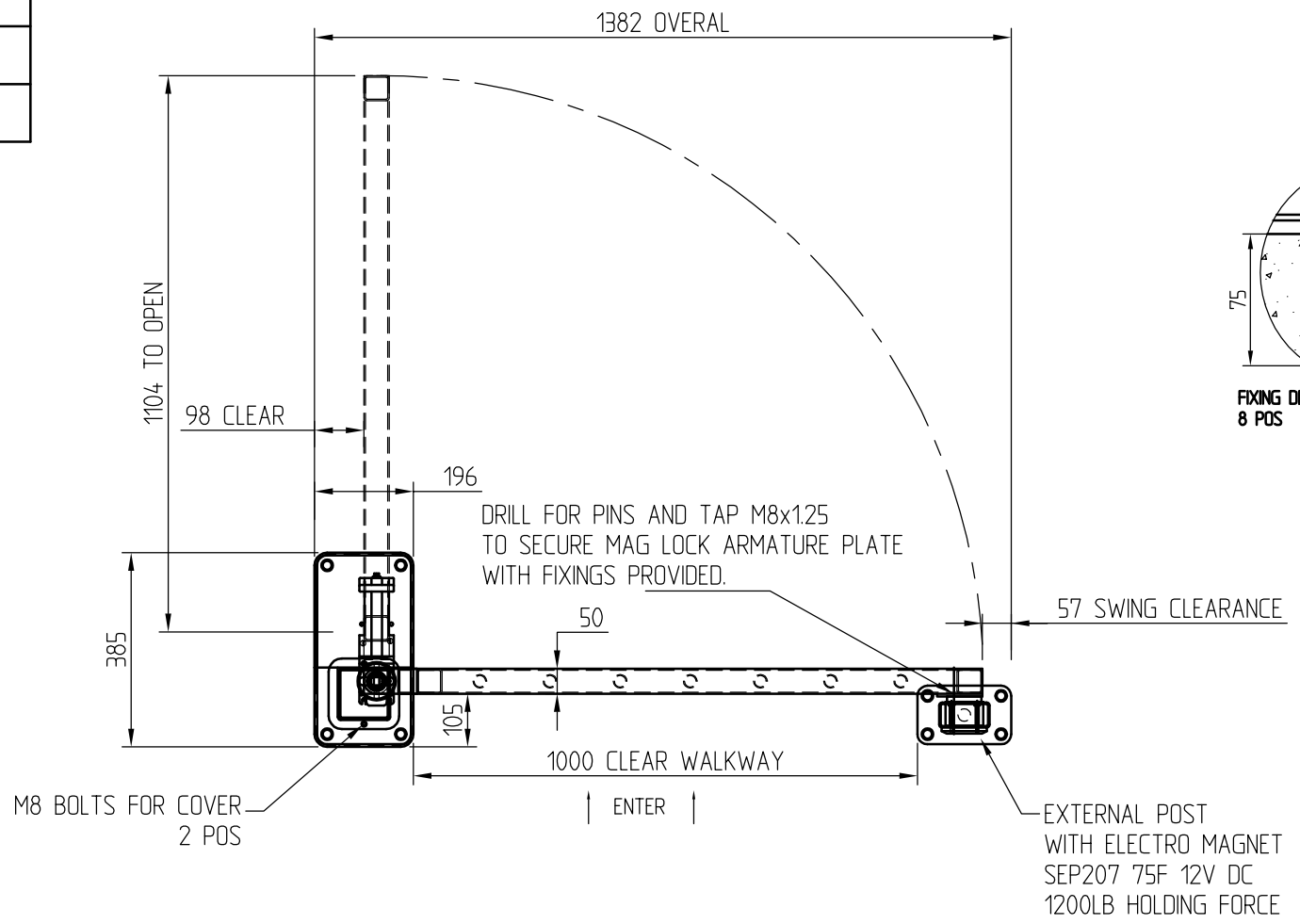

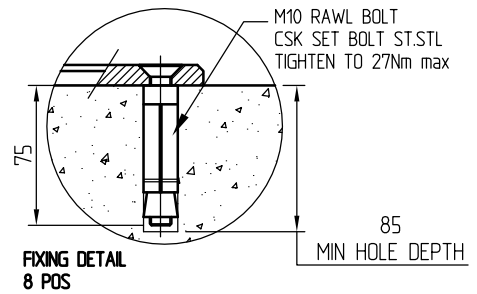

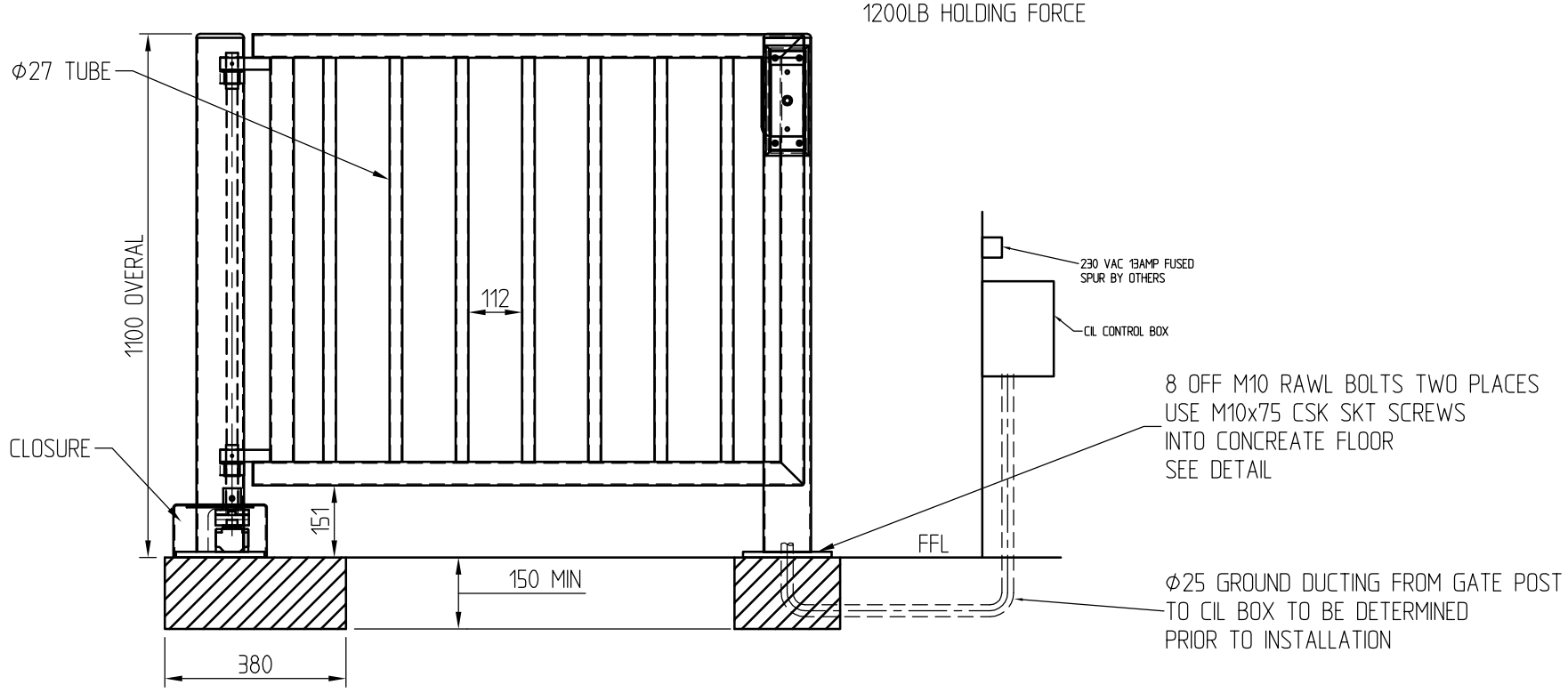

CLARKE INSTRUMENTS Ltd
RESERVES THE RIGHT TO
CHANGE DETAILS WITHOUT
PRIOR NOTICE.

ISSUE	DATE	CHANGE NOTE
-	-	-
A	29.01.04	-

DRAWN	M.KEADY	CHECKED	CERTD.	SCALE	N.T.S

PROTECTIVE FINISH
POLISHED OR GALV/POWDER COAT

TOLERANCES FOR DIMENSIONS
DIMS. SHOWN THUS >449 ±1
DIMS. SHOWN THUS 1. ±0.4
DIMS. SHOWN THUS 1.0 ±0.15
DIMS. SHOWN THUS 1.00 ±0.05
UNLESS OTHERWISE STATED
ALL DIMENSIONS IN MILLIMETRES

MATERIAL
ST.STL OR MILD STEEL

STORES REF. -

Clarke Instruments Ltd.

TITLE
HEAVY DUTY SINGLE DIRECTION SWING GATE
WITH ELECTRO-MAGNET SLAM POST LOCK

DRG.No. A3
184-200