DRG.No. 188-200
USED ON
-

DRAWN TO B.S. 8888

THIRD ANGLE PROJECTION

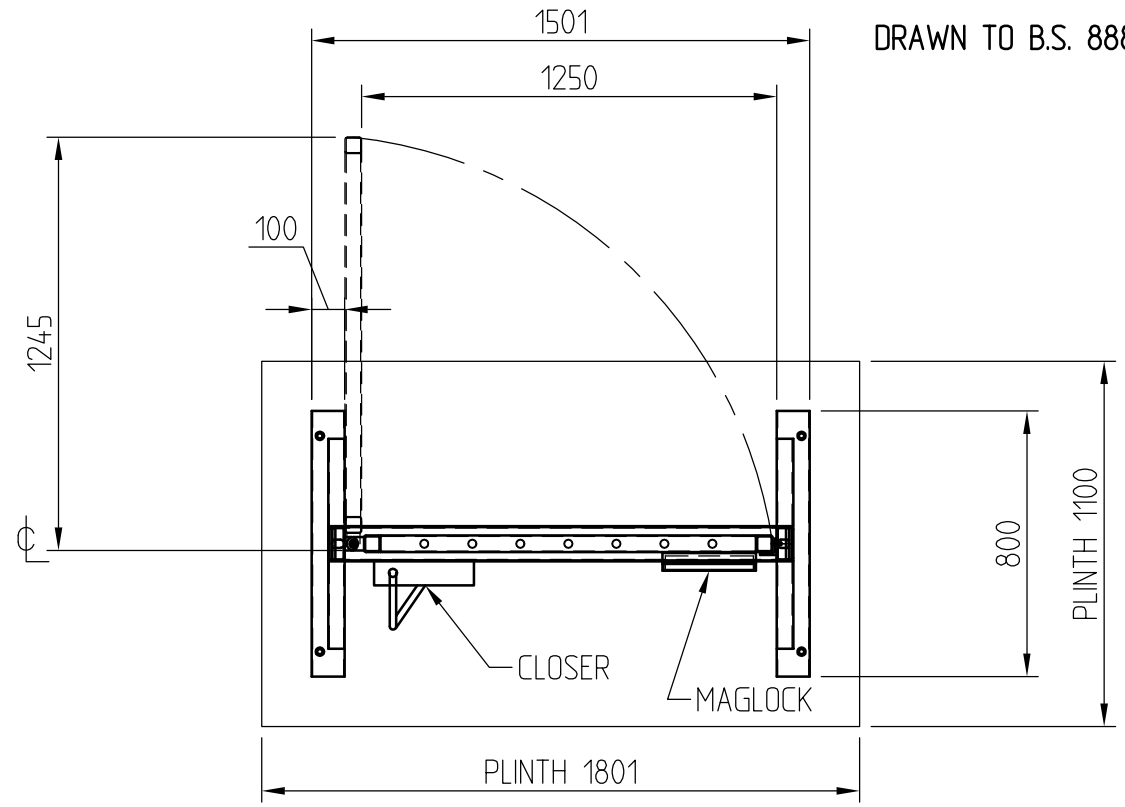

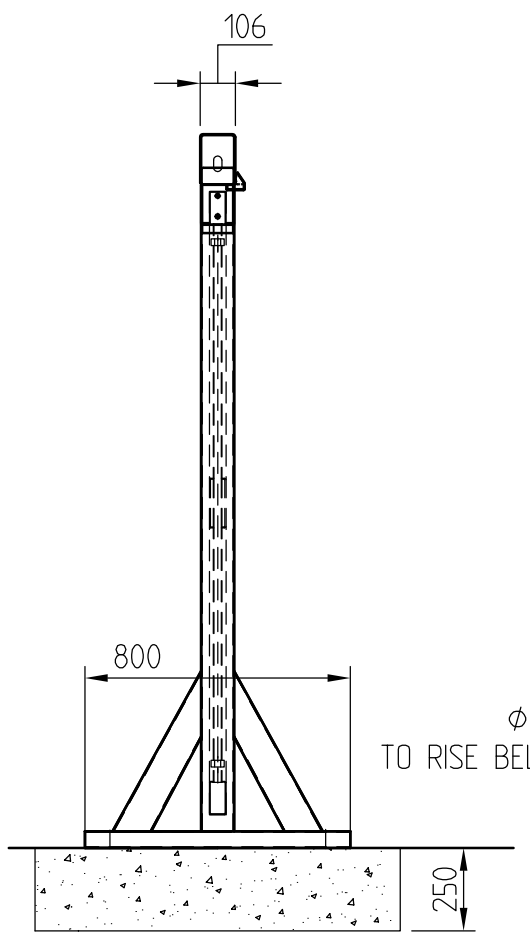

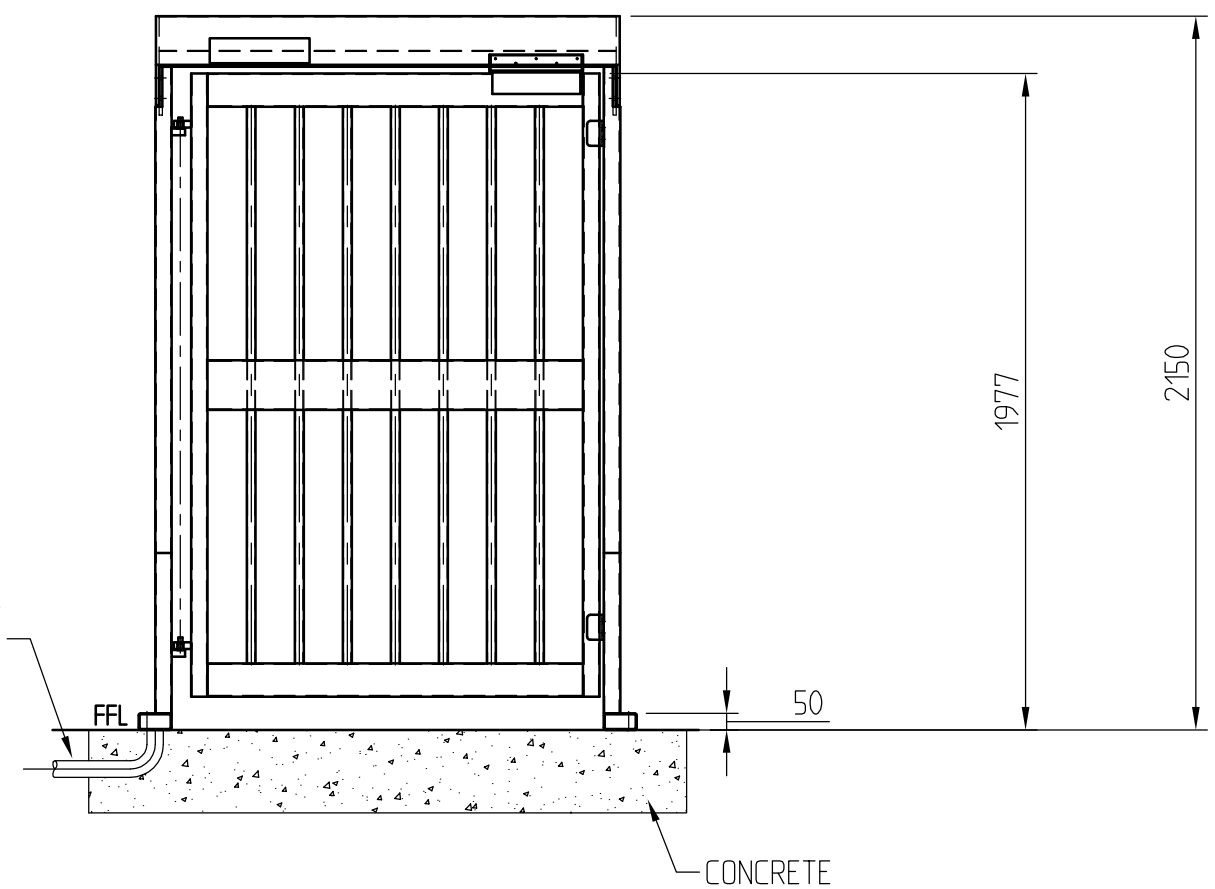

Φ50 DUCT FOR LOW VOLTAGE WIRES
TO RISE BELOW HINGE OR SLAM POST UPRIGHT

ISSUE	DATE	CHANGE NOTE
-	-	-
A	09.06.04	-

DRAWN	M.KEADY	CHECKED	CERTD.	SCALE	N.T.S

PROTECTIVE FINISH
-

TOLERANCES FOR DIMENSIONS
DIMS. SHOWN THUS >449 ±1
DIMS. SHOWN THUS 1. ±0.4
DIMS. SHOWN THUS 1.0 ±0.15
DIMS. SHOWN THUS 1.00 ±0.05
UNLESS OTHERWISE STATED
ALL DIMENSIONS IN MILLIMETRES

MATERIAL
-

STORES REF. -

Clarke Instruments Ltd.

TITLE
SINGLE FULL HIEGHT GATE

DRG.No. A3
188-200