DRG.No.	420A-202
USED ON	
-	

DRAWN TO B.S. 8888

THIRD ANGLE PROJECTION

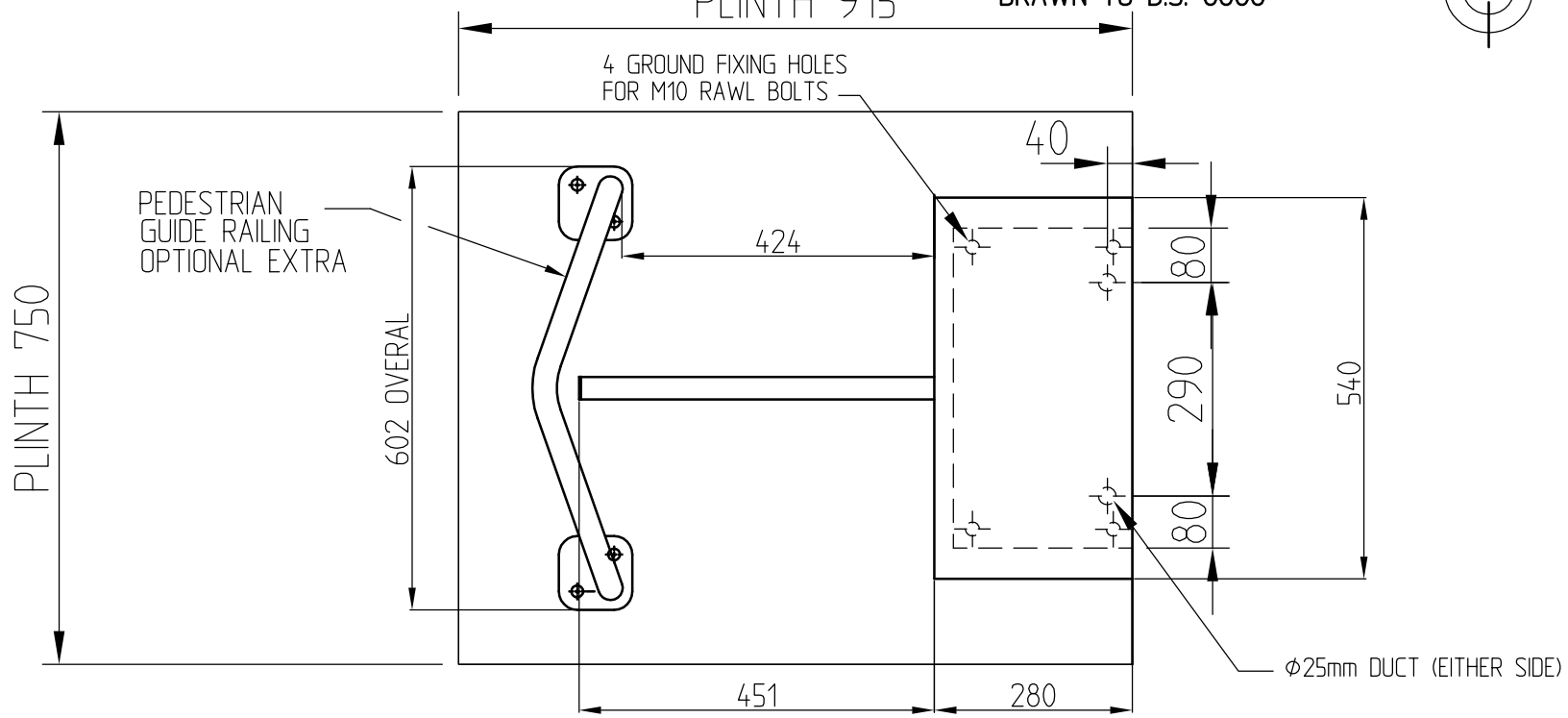

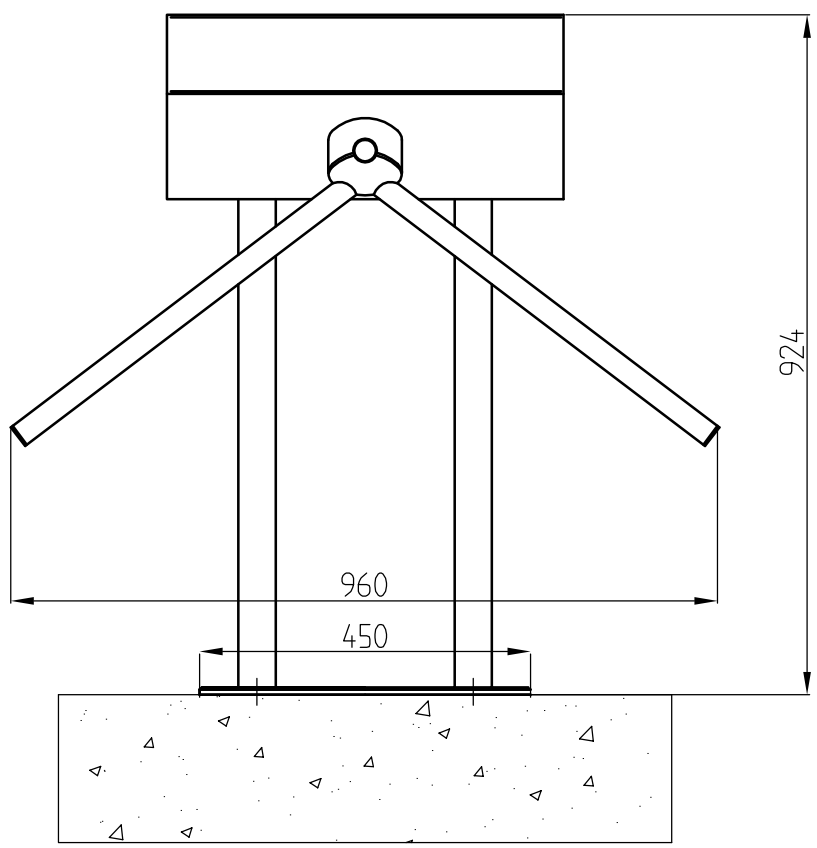

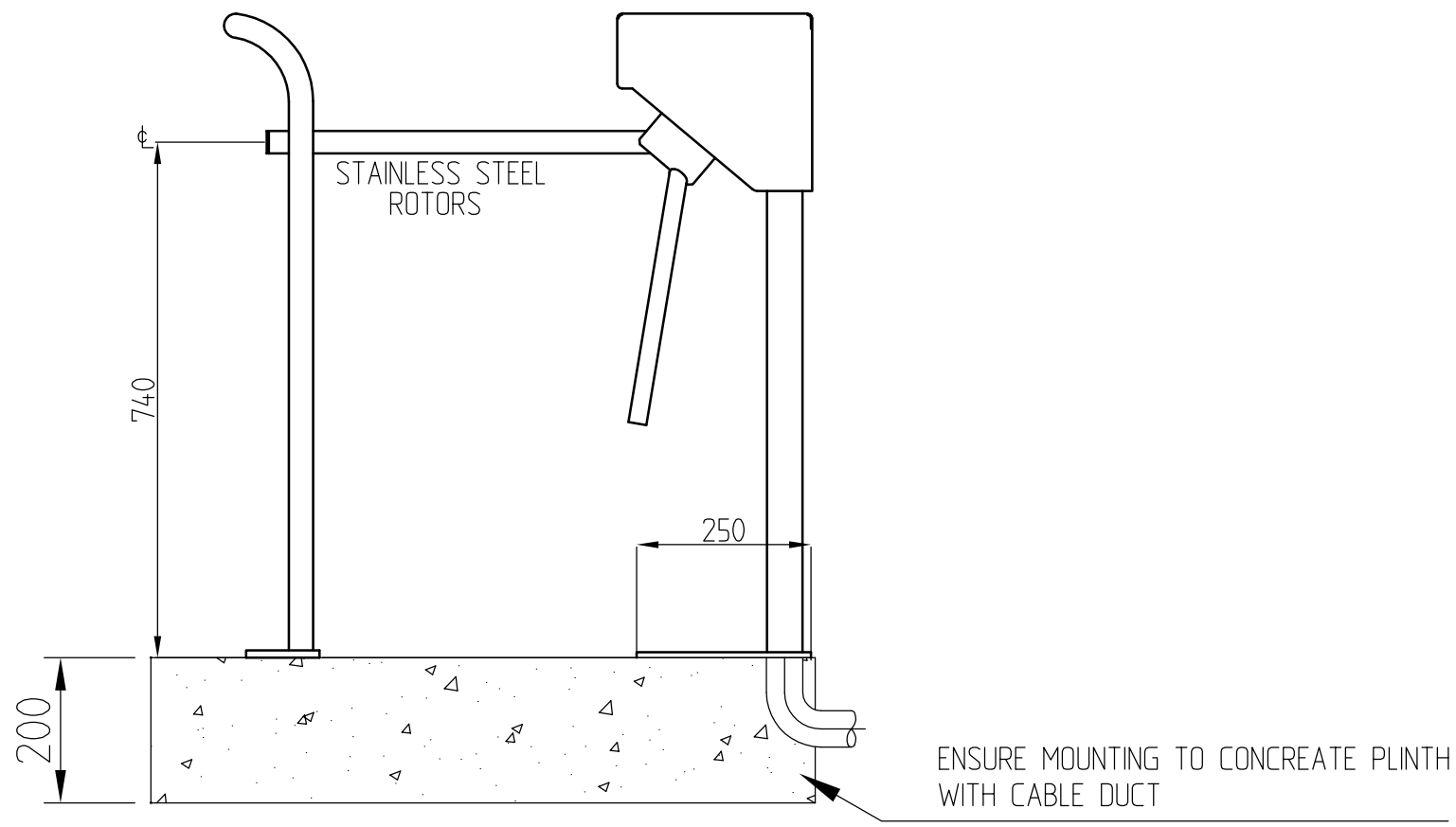

B	10.05.04	GUIDE RAIL MADE OPTIONAL EXTRA		
A	03.01.03	-		
ISSUE	DATE	CHANGE NOTE		
DRAWN	M.KEADY	CHECKED	CERTD.	SCALE N.T.S

PROTECTIVE FINISH
-

TOLERANCES FOR DIMENSIONS
DIMS. SHOWN THUS >449 ±1
DIMS. SHOWN THUS 1. ±0.4
DIMS. SHOWN THUS 1.0 ±0.15
DIMS. SHOWN THUS 1.00 ±0.05
UNLESS OTHERWISE STATED
ALL DIMENSIONS IN MILLIMETRES

MATERIAL
-

STORES REF. -

Clarke Instruments Ltd.

TITLE
420A COMPACT TRIPOD
TURNSTILE WITH GUIDE RAIL

DRG.No. A3
420A-202