DRG No: 424-200	CLARKE INSTRUMENTS Ltd RESERVES THE RIGHT TO CHANGE DETAILS WITHOUT PRIOR NOTICE.

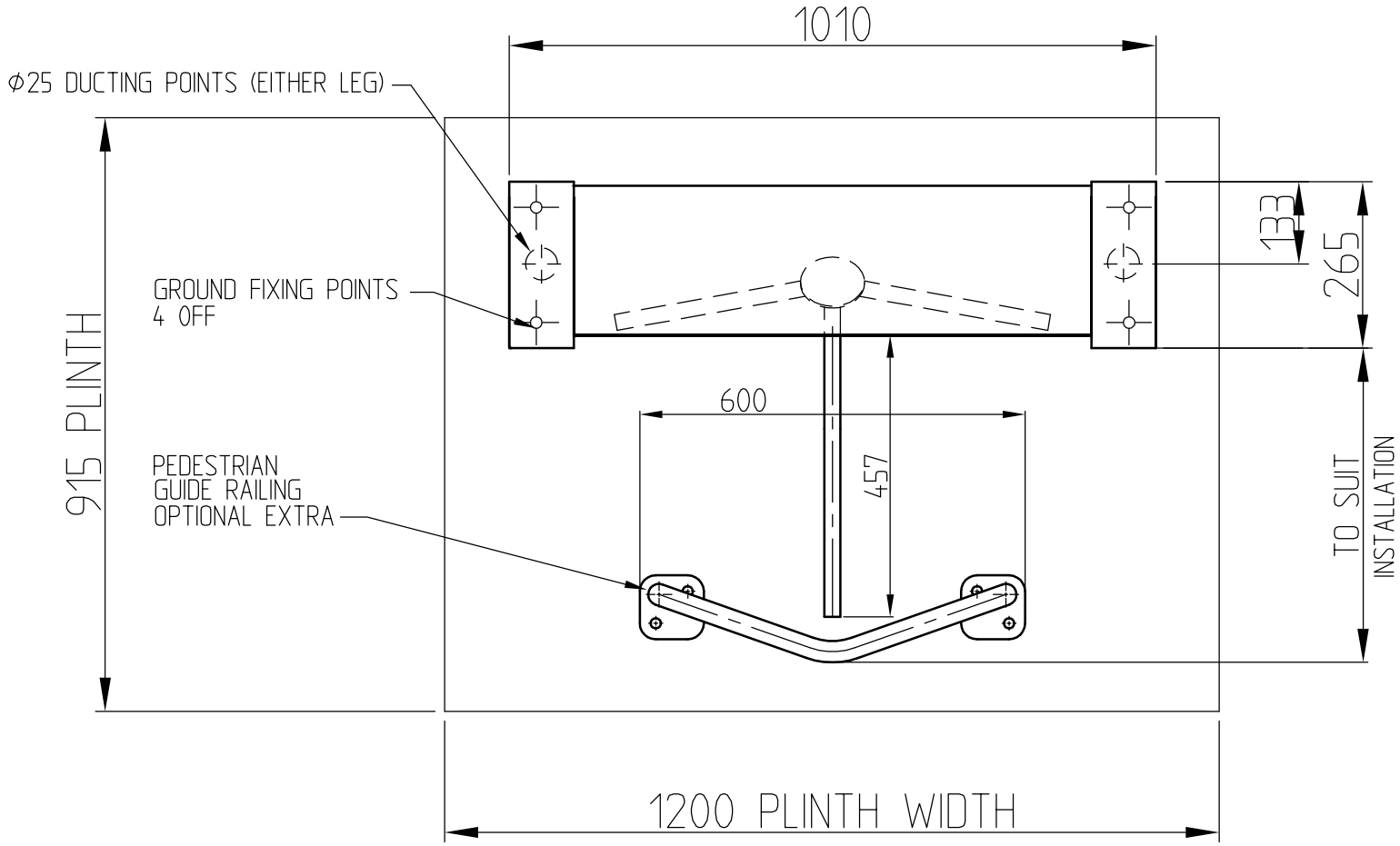

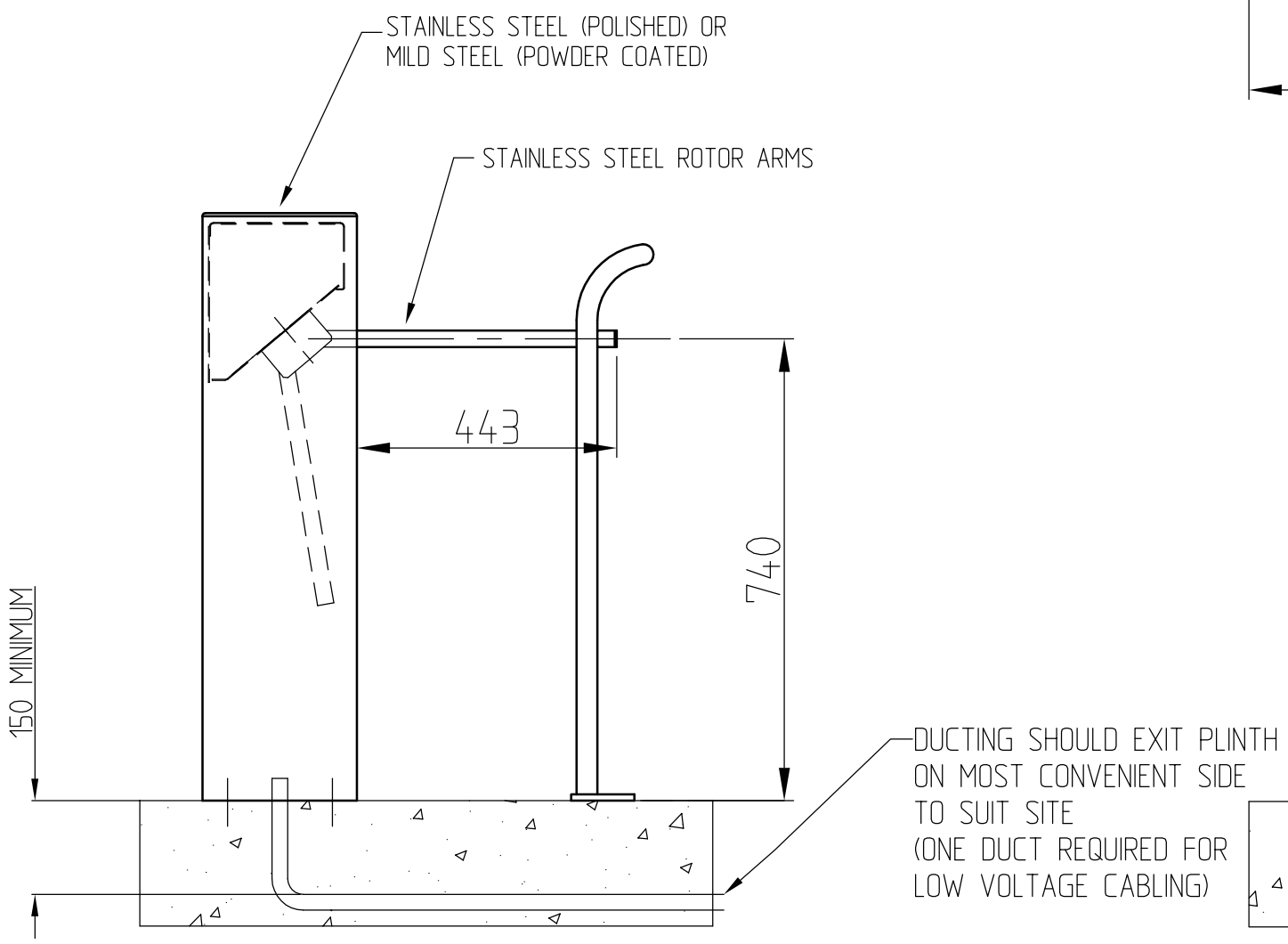

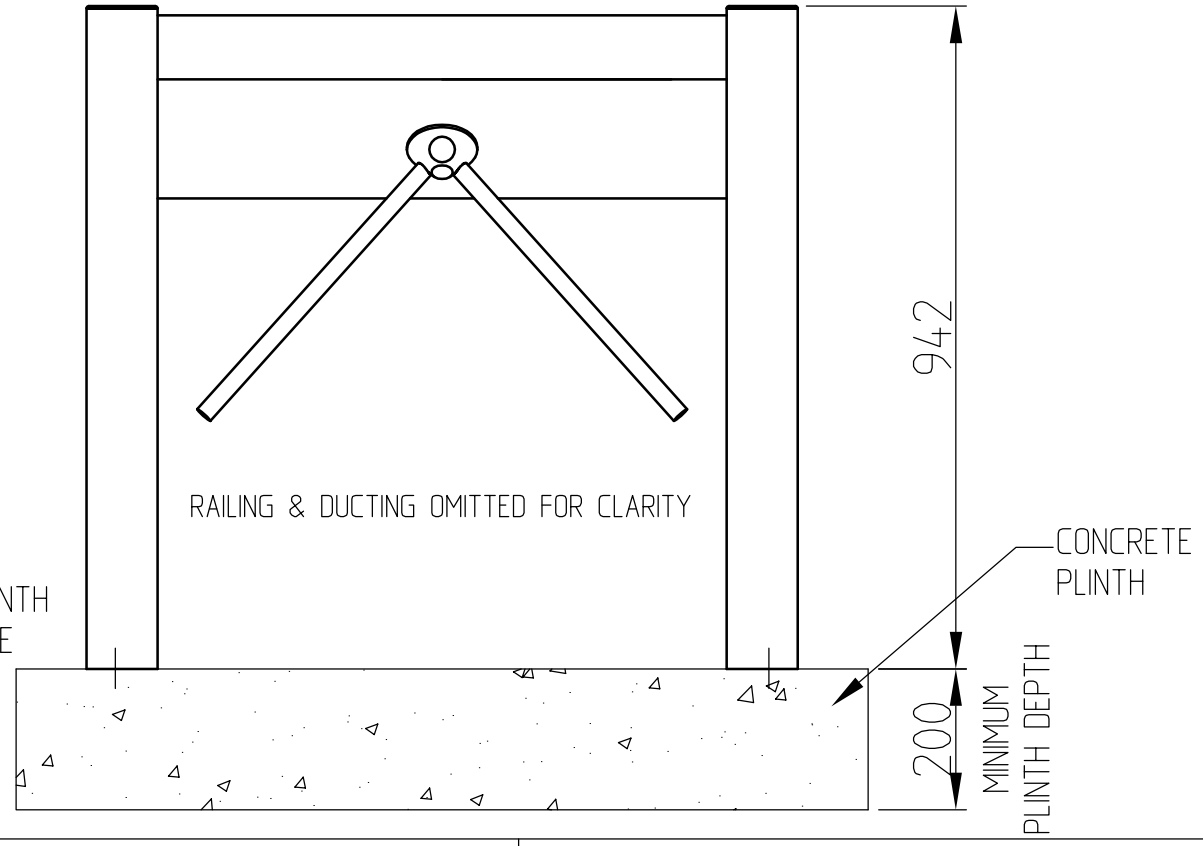

			MATERIAL: SEE ABOVE	FINISH: SEE ABOVE	CLARKE INSTRUMENTS Ltd
			ALL DIMENSIONS ARE IN mm. DO NOT SCALE	SALES ILLUSTRATION 424 TRIPOD TURNSTILE WITH GUIDE RAIL	DRG No: 424-200
A	04.03.02	-			
ISS	DATE	CHANGE NOTE No.			
DRAWN		SIJ			