DRG.No.	480A-209
USED ON	
-	

CLARKE INSTRUMENTS Ltd RESERVES THE RIGHT TO CHANGE DETAILS WITHOUT PRIOR NOTICE.

DRAWN TO B.S. 8888

THIRD ANGLE PROJECTION

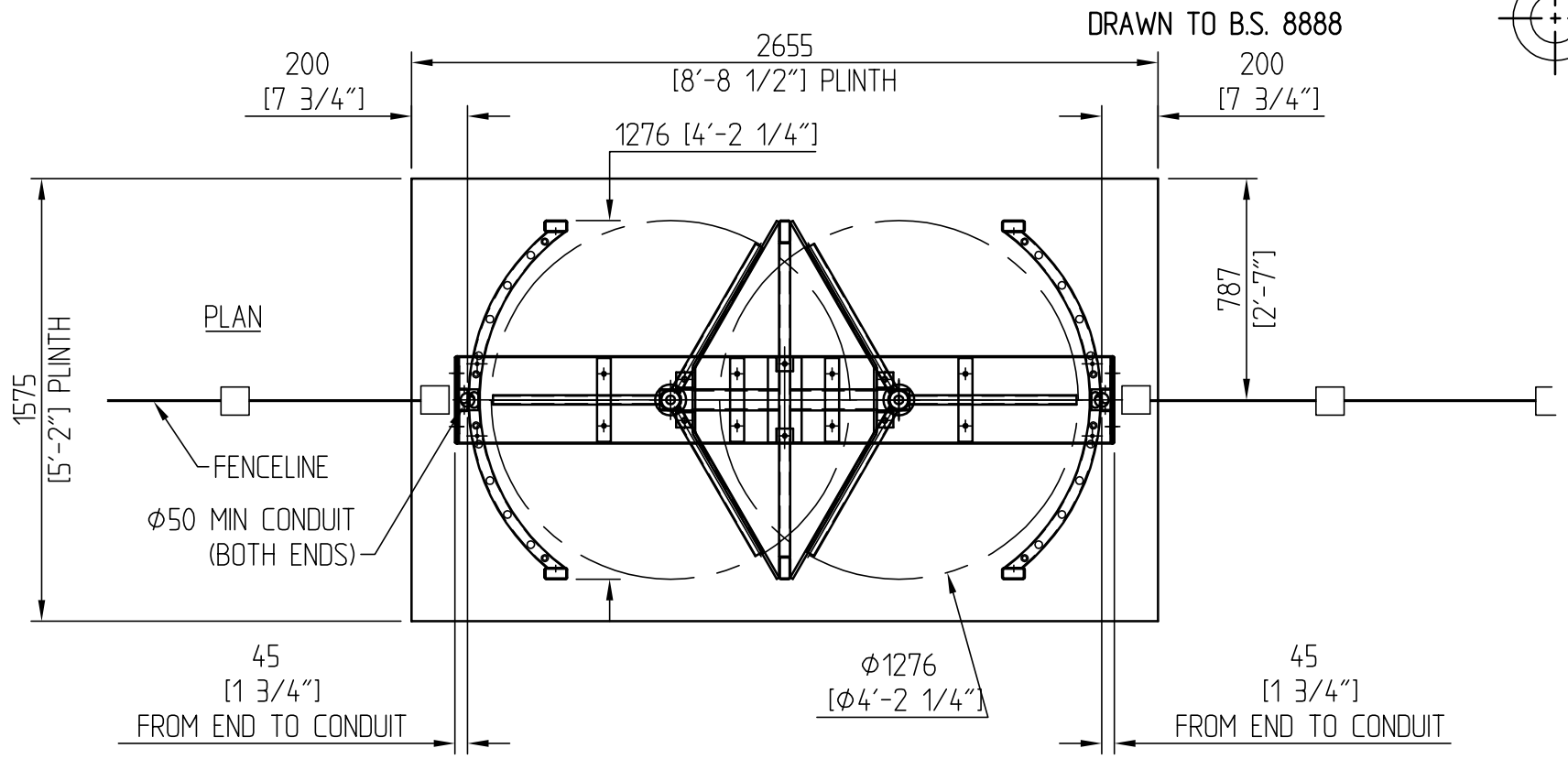

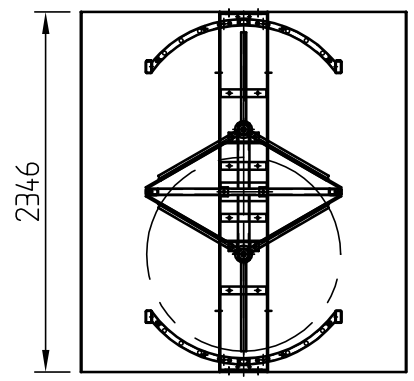

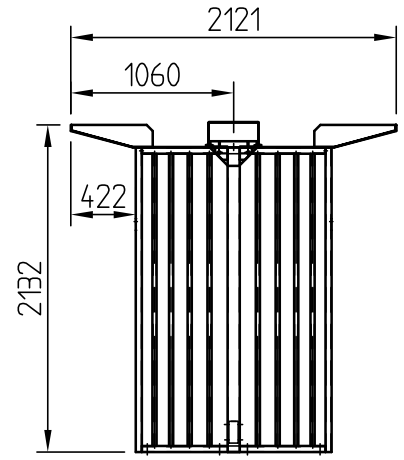

OPTIONAL EXTRA RAIN COVER

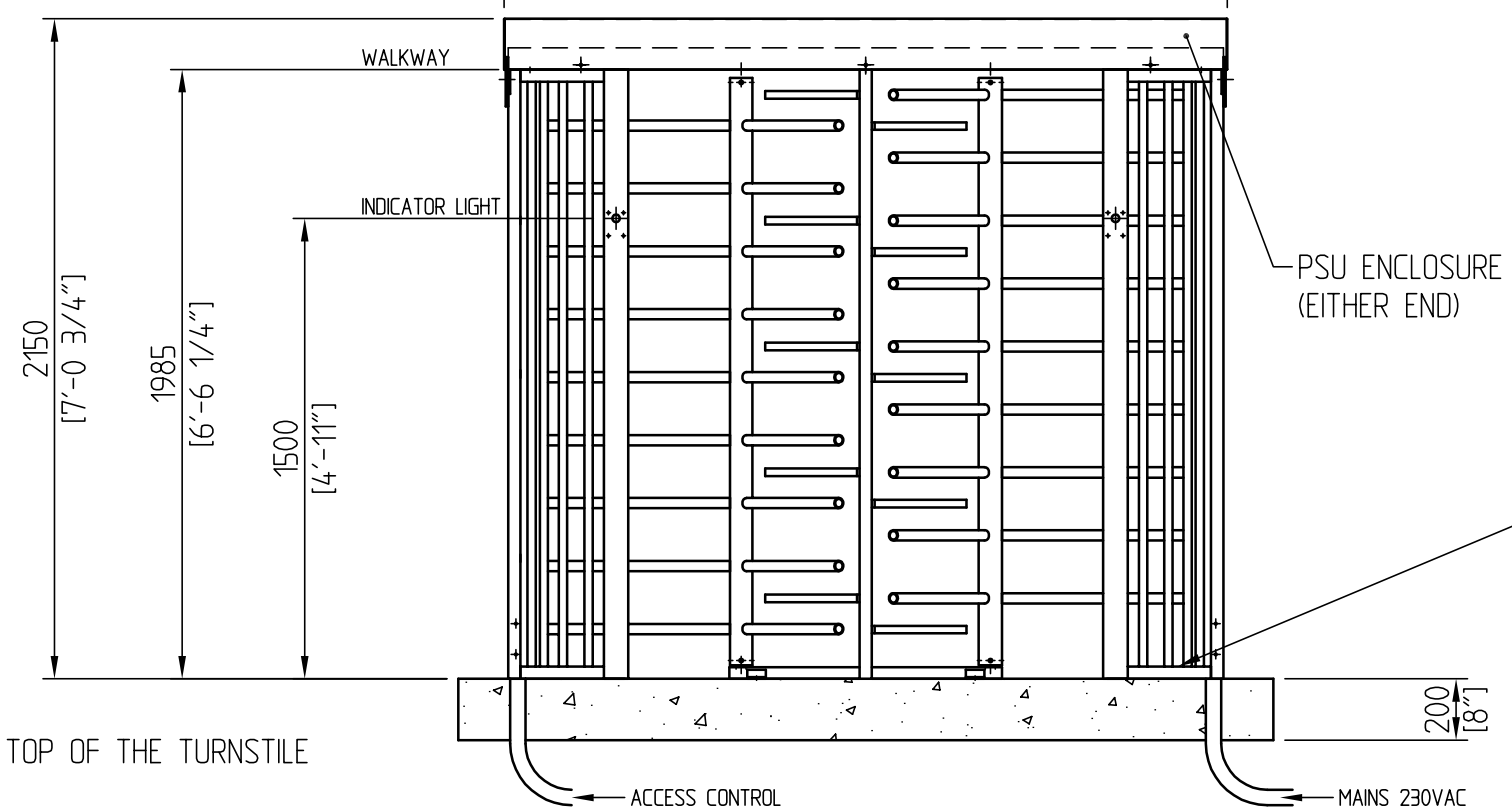

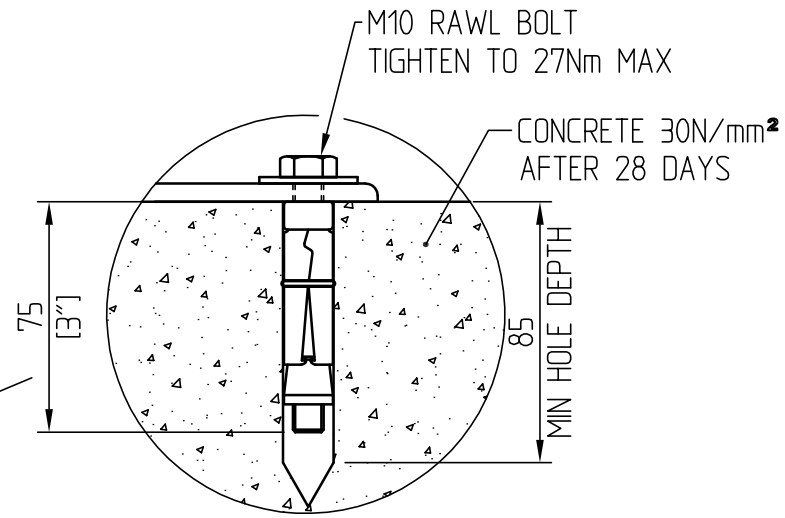

TYPICAL FIXING DETAIL
14 POS

NOTE:
TURNSTILE SUPPLY VOLTAGE 230VAC 5AMP
(MAINS SUPPLY CONNECTION TO BE
TERMINATED IN THE 'DC PSU' LOCATED IN THE TOP OF THE TURNSTILE
ALLOW 3.5M OF CABLE ABOVE GROUND)

ISSUE	DATE	CHANGE NOTE
C	09-12-09	OPTIONAL RAIN COVER ADDED
B	01-05-09	TITLE CHANGED
A	06.11.06	-

DRAWN	BJG	CHECKED	CERTD.	SCALE	N.T.S

PROTECTIVE FINISH
-

TOLERANCES FOR DIMENSIONS
DIMS. SHOWN THUS >449 ±1
DIMS. SHOWN THUS 1. ±0.4
DIMS. SHOWN THUS 1.0 ±0.15
DIMS. SHOWN THUS 1.00 ±0.05
UNLESS OTHERWISE STATED
ALL DIMENSIONS IN MILLIMETRES

MATERIAL
-

STORES REF. -

Clarke Instruments Ltd.

TITLE
FENCELINE ECONOMY DOUBLE TURNSTILE
120° STRAIGHT BAR ROTOR

DRG.No. A3
480A-209