DRG.No. 498-201
USED ON
-

CLARKE INSTRUMENTS LIMITED
RESERVE THE RIGHT TO MODIFY
THE DESIGN WITHOUT NOTICE

NOTE :–
NORMALLY THE POWER SUPPLY UNIT AND CONTROL BOARD ENCLOSURE ARE CONTAINED WITHIN THE CANOPY.

DRAWN TO B.S. 8888

THIRD ANGLE PROJECTION

SINGLE GATE

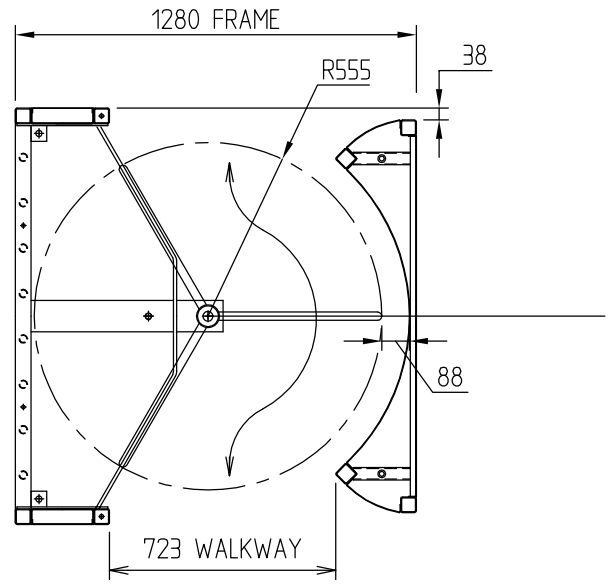

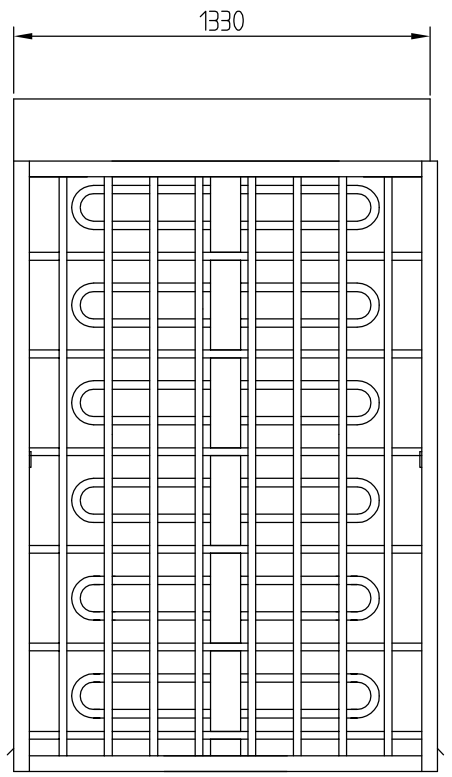

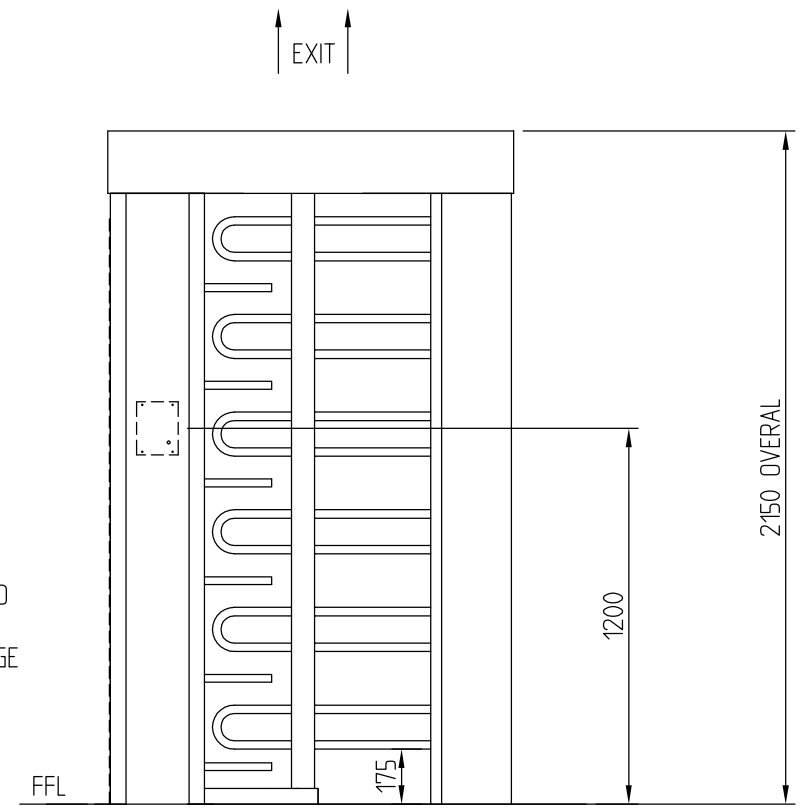

THE CUSTOMER TO ENSURE A SUITABLE STRUCTURED OPENING FOR MOUNTING, WITH FREE STANDING STRONG POINT BY MEANS OF THE NORMAL ACHORAGE SPECIFIED BY THE MANUFACTURE.

ISSUE	DATE	CHANGE NOTE
-	-	-
A	04.04.03	-

DRAWN	M.KEADY	CHECKED	CERTD.	SCALE	N.T.S

PROTECTIVE FINISH
CIL SPEC 'C'

TOLERANCES FOR DIMENSIONS
DIMS. SHOWN THUS >449 ±1
DIMS. SHOWN THUS 1. ±0.4
DIMS. SHOWN THUS 1.0 ±0.15
DIMS. SHOWN THUS 1.00 ±0.05
UNLESS OTHERWISE STATED
ALL DIMENSIONS IN MILLIMETRES

MATERIAL
-

STORES REF. -

Clarke Instruments Ltd.

TITLE
498 FOYER 120° HOOPED TURNSTILL SINGLE

DRG.No. A3
498-201