DRG.No.	498-202
USED ON	
-	

CLARKE INSTRUMENTS LIMITED
RESERVE THE RIGHT TO MODIFY
THE DESIGN WITHOUT NOTICE

NOTE :–
NORMALLY THE POWER SUPPLY UNIT AND CONTROL BOARD ENCLOSURE ARE CONTAINED WITHIN THE CANOPY.

DRAWN TO B.S. 8888

THIRD ANGLE PROJECTION

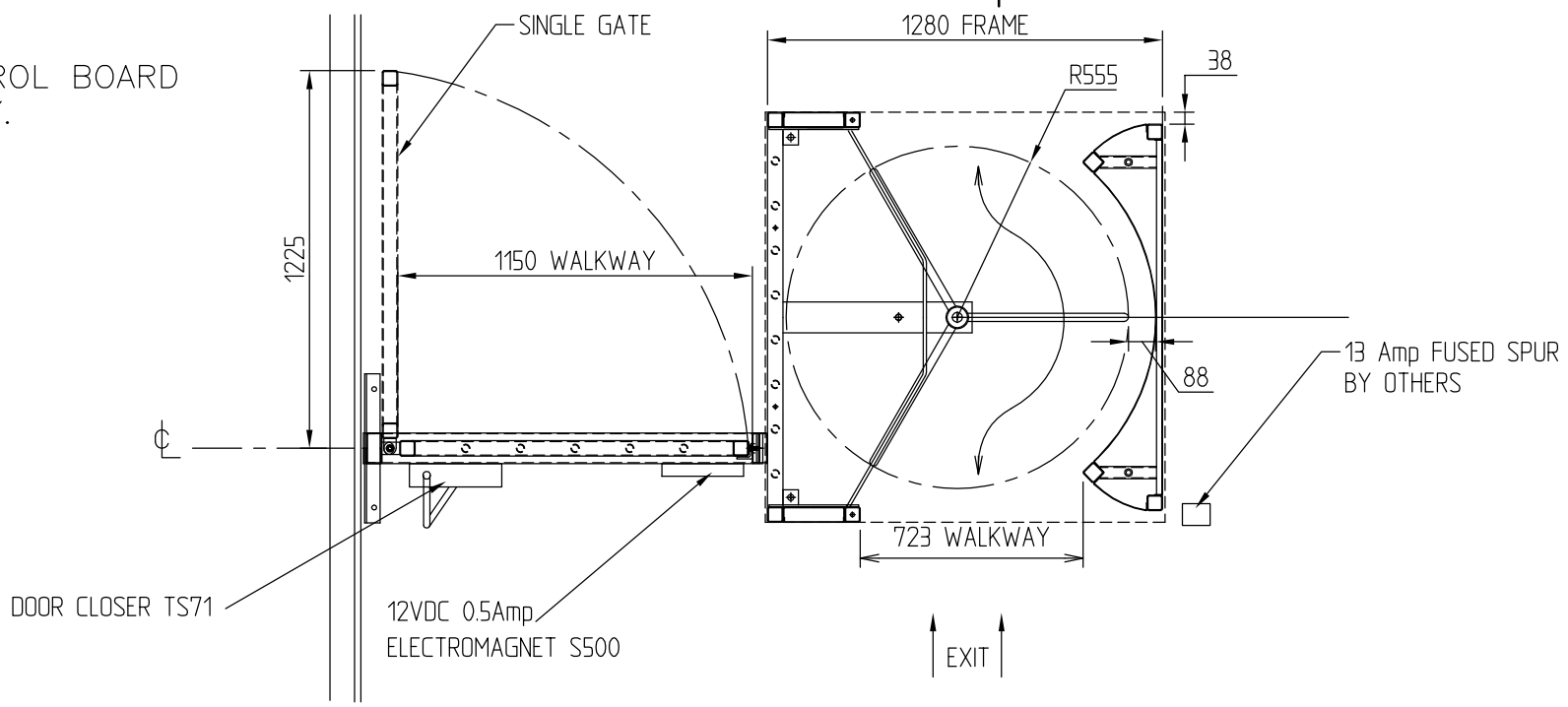

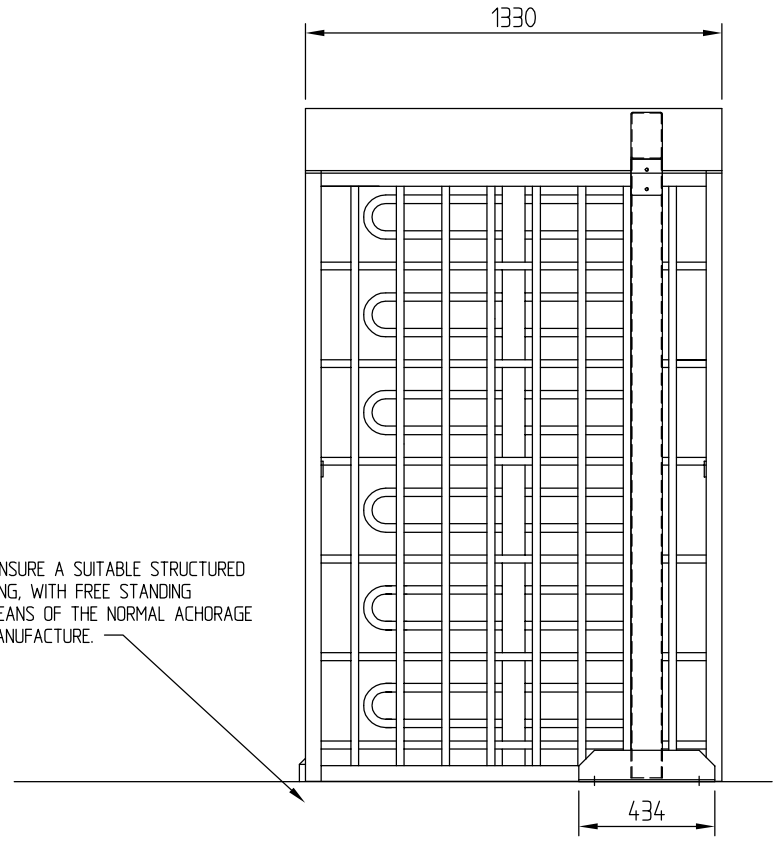

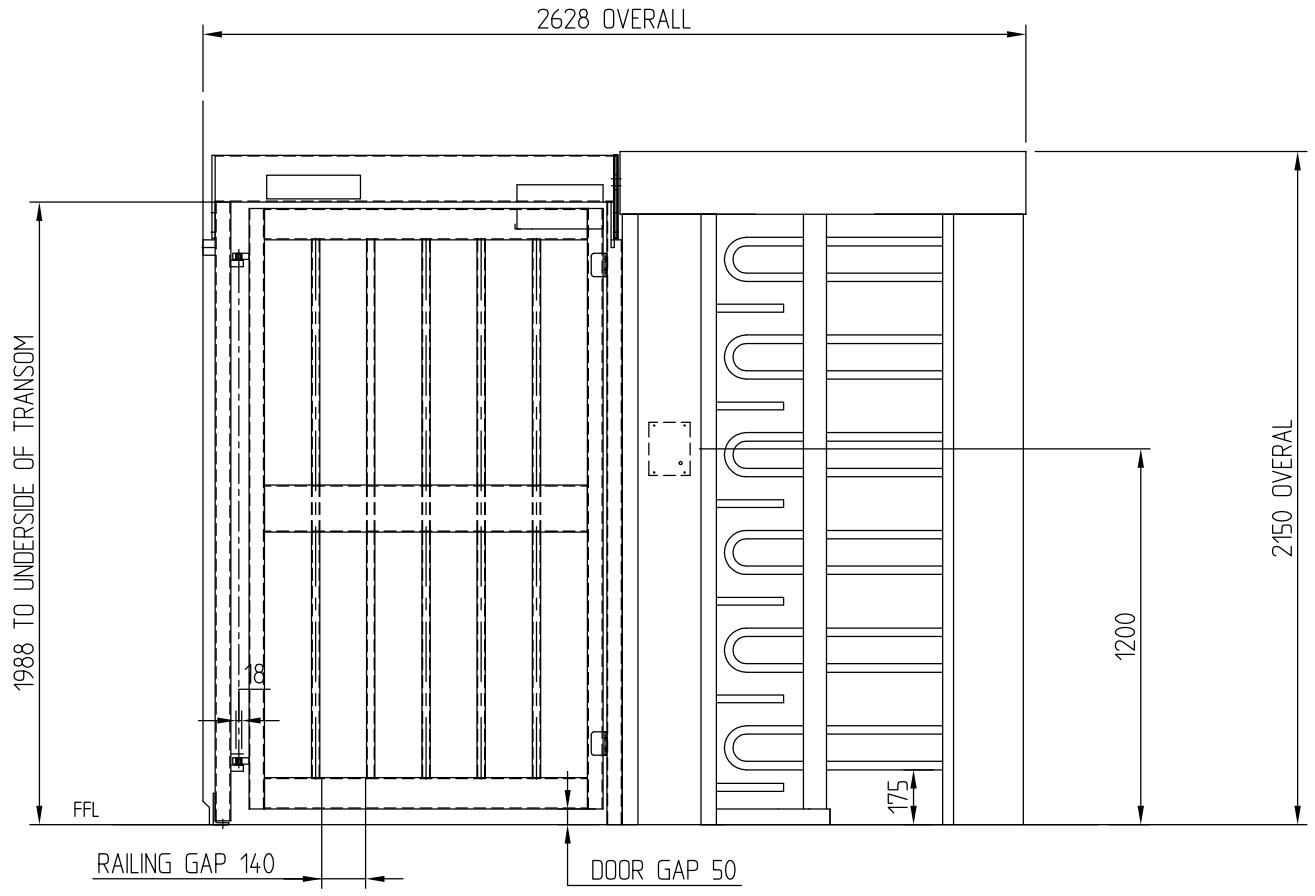

-	-	-		
A	04.04.03	-		
ISSUE	DATE	CHANGE NOTE		
DRAWN	M.KEADY	CHECKED	CERTD.	SCALE N.T.S

PROTECTIVE FINISH
CIL SPEC 'C'

TOLERANCES FOR DIMENSIONS
DIMS. SHOWN THUS >449 ±1
DIMS. SHOWN THUS 1. ±0.4
DIMS. SHOWN THUS 1.0 ±0.15
DIMS. SHOWN THUS 1.00 ±0.05
UNLESS OTHERWISE STATED
ALL DIMENSIONS IN MILLIMETRES

MATERIAL
-

STORES REF. -

Clarke Instruments Ltd.

TITLE
498 FOYER 120° HOOPED TURNSTILL SINGLE
WITH GATE

DRG.No. A3
498-202