DRG No: 523B-200	CLARKE INSTRUMENTS Ltd RESERVES THE RIGHT TO CHANGE DETAILS WITHOUT PRIOR NOTICE.

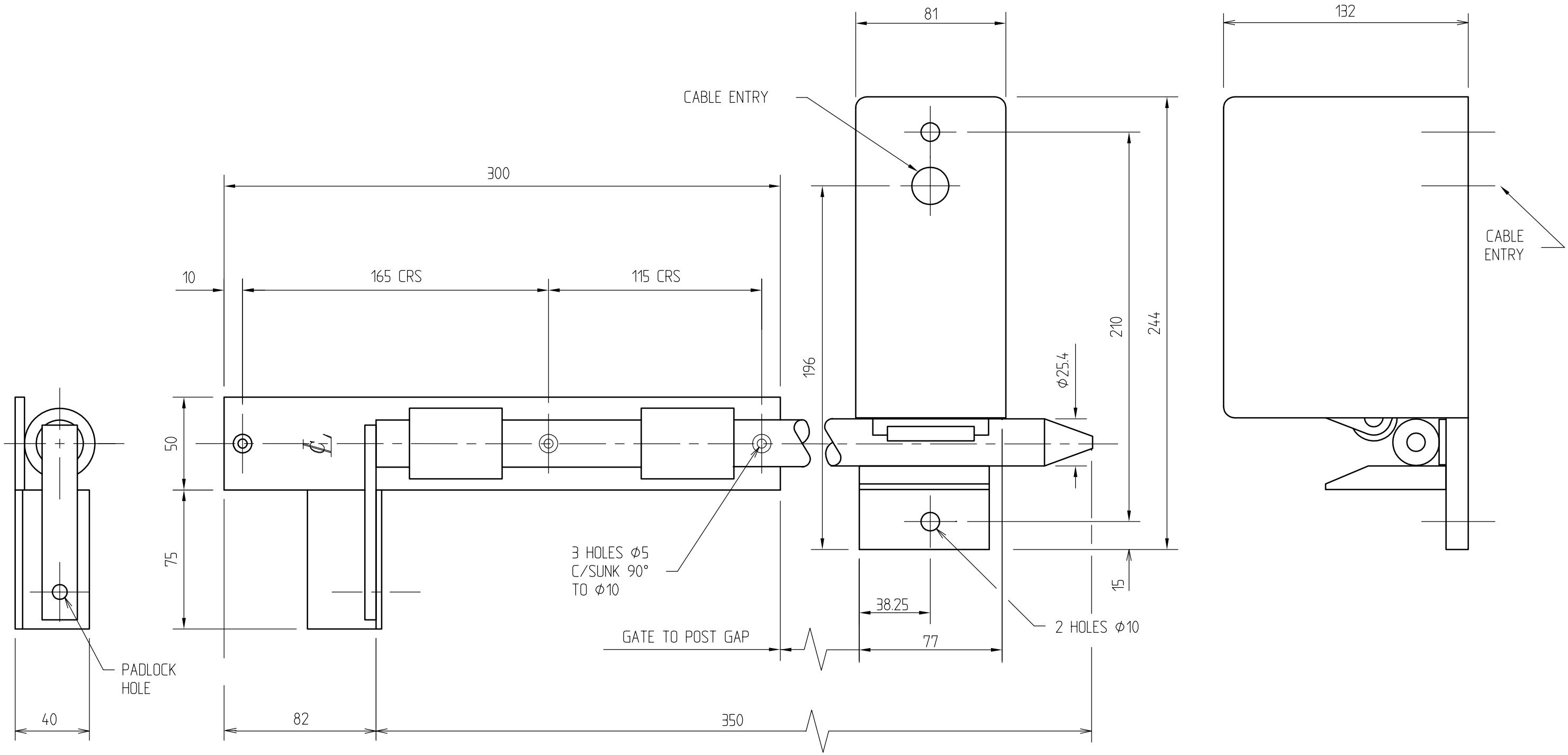

			MATERIAL:	FINISH:	CLARKE INSTRUMENTS Ltd
			ALL DIMENSIONS ARE IN mm. DO NOT SCALE	SALES ILLUSTRATION GATELOCK	DRG No: 523B-200
A	13.11.01	-			
ISS	DATE	CHANGE NOTE No.			
DRAWN		SIJ			

02/07/2004 12:16:00, mike