DRG.No. 659-300
USED ON
659-000

- DO NOT SCALE -

DRAWN TO B.S. 308

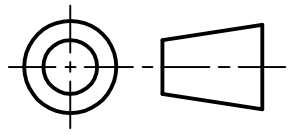

THIRD ANGLE PROJECTION

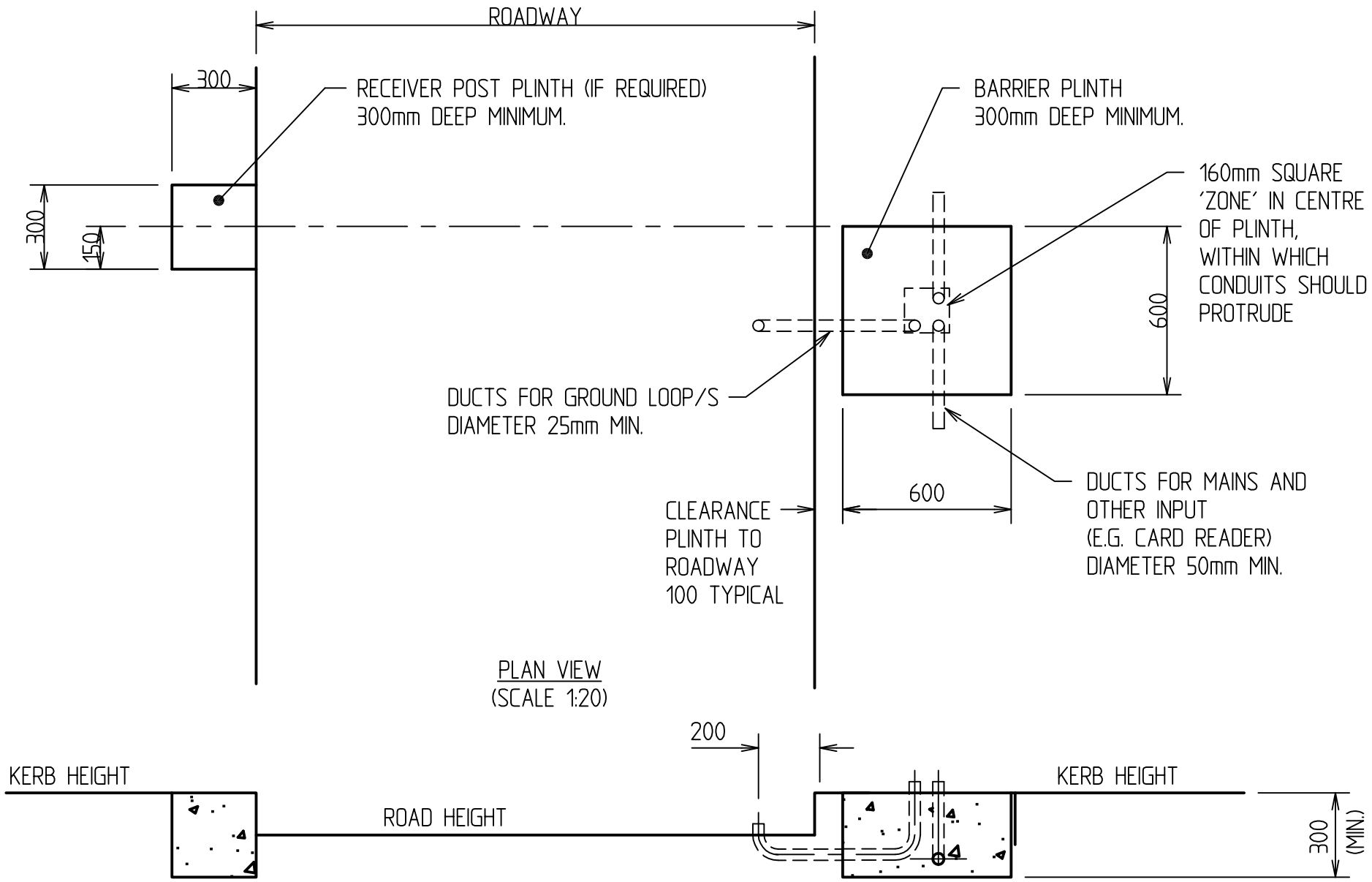

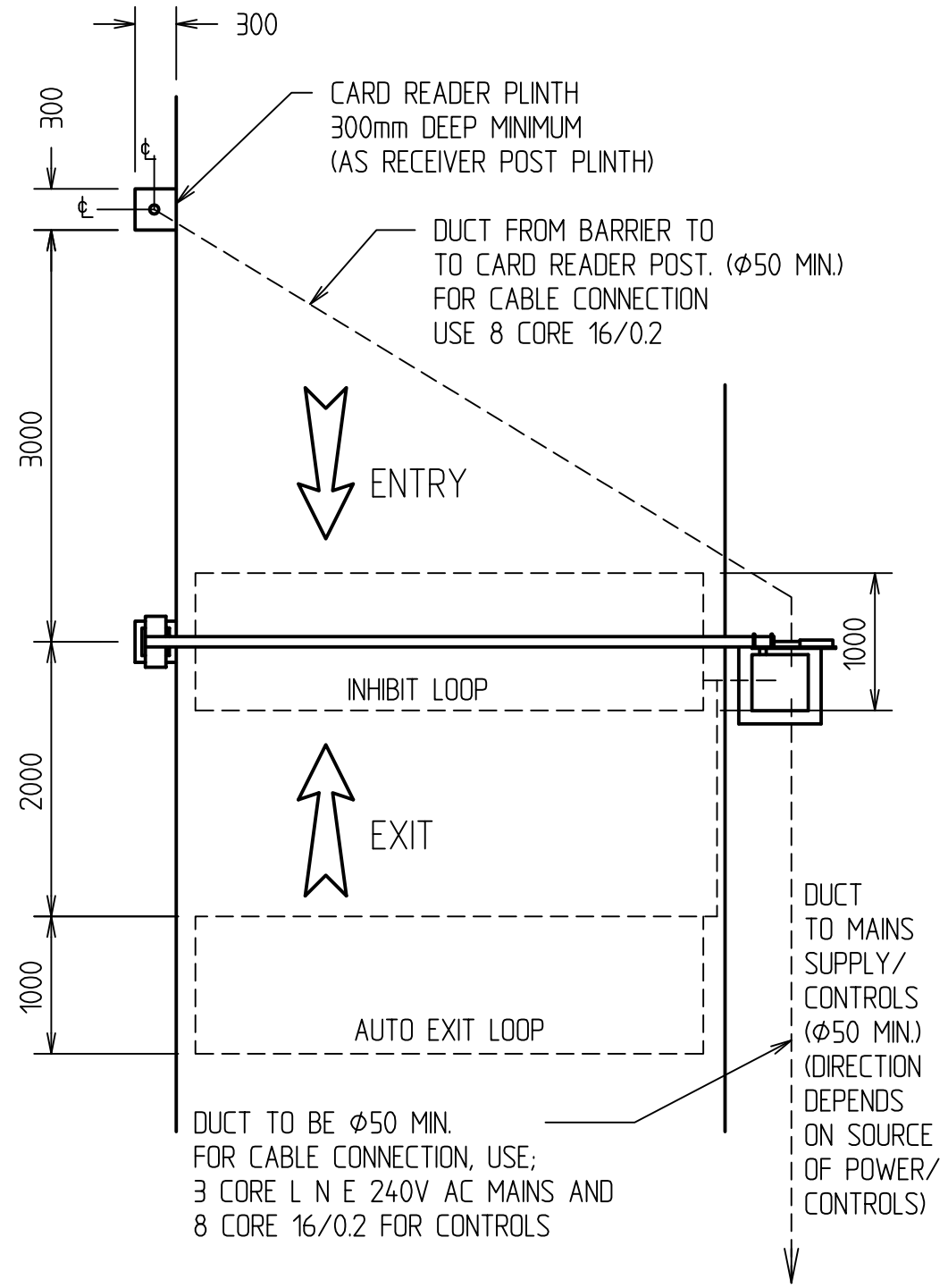

PLAN VIEW WITH BARRIER SHOWN IN PLACE

TYPICAL GROUND LOOP AND CARD READER LAYOUT

(ACTUAL SIZES & QUANTITIES MAY VARY DEPENDING ON TYPE OF VEHICLES. ANY PROBLEMS SEEK C.I.L. ADVICE)
(SCALE 1:50)

NOTES;
- TYPICAL RIGHT HAND BARRIER INSTALLATION SHOWN
- USE STANDARD CONCRETE MIX
- SOME GROUND CONDITIONS MAY REQUIRE GREATER PLINTH DEPTH
- CLARKE INSTRUMENTS LIMITED RESERVE THE RIGHT TO CHANGE THE DESIGN WITHOUT NOTICE

ISSUE	DATE	CHANGE NOTE	ISSUE	DATE	CHANGE NOTE
A	1-6-99	-			
DRAWN	CJB	CHECKED	CERTD.		SCALE 1:20 & 1:50

PROTECTIVE FINISH
-

TOLERANCES FOR DIMENSIONS
DIMS. SHOWN THUS 1. ±0.4
DIMS. SHOWN THUS 1.0 ±0.15
DIMS. SHOWN THUS 1.00 ±0.05
UNLESS OTHERWISE STATED
ALL DIMENSIONS IN MILLIMETRES

MATERIAL
-

STORES REF.

Clarke Instruments Ltd.

TITLE
R.H. INSTALLATION GUIDE
FOR CONCRETE PLINTHS AND DUCTING

DRG.No. A3
659-300