DRG.No. 660-202
USED ON
-

DRAWN TO B.S. 8888

THIRD ANGLE PROJECTION

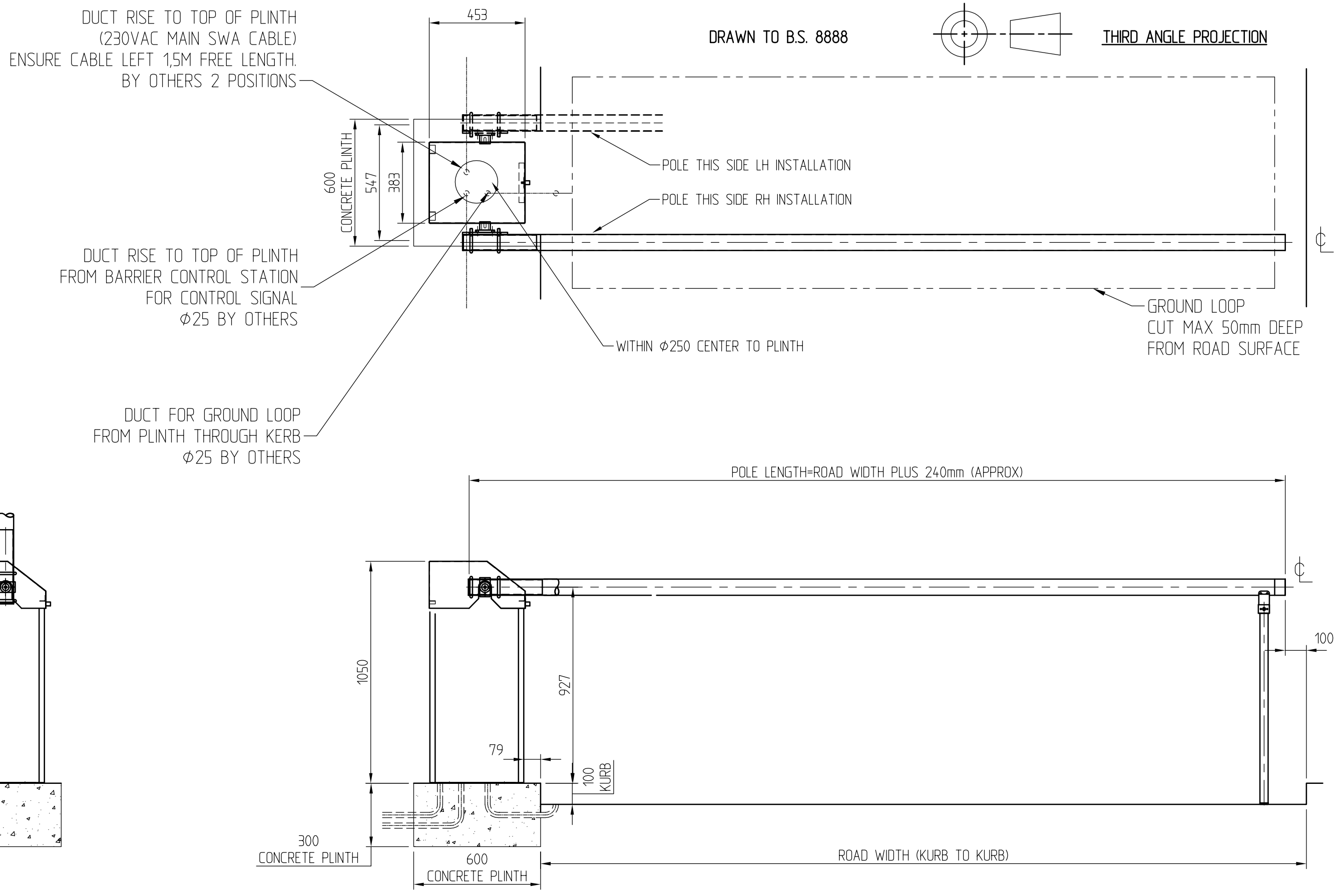

-	-	-			
A	03.11.03	PROD ISSUE			
ISSUE	DATE	CHANGE NOTE			
DRAWN	M.KEADY	CHECKED	CERTD.	SCALE	N.T.S

PROTECTIVE FINISH
-

MATERIAL
-

STORES REF. -

TOLERANCES FOR DIMENSIONS
DIMS. SHOWN THUS >449 ±1
DIMS. SHOWN THUS 1. ±0.4
DIMS. SHOWN THUS 1.0 ±0.15
DIMS. SHOWN THUS 1.00 ±0.05
UNLESS OTHERWISE STATED
ALL DIMENSIONS IN MILLIMETRES

Clarke Instruments Ltd.

TITLE
660 BARRIER 5m POLE SIDE MOUNTED WITH POGO STICK

DRG.No. A3
660-202