DRG.No. 660-204
USED ON
-

DRAWN TO B.S. 8888

THIRD ANGLE PROJECTION

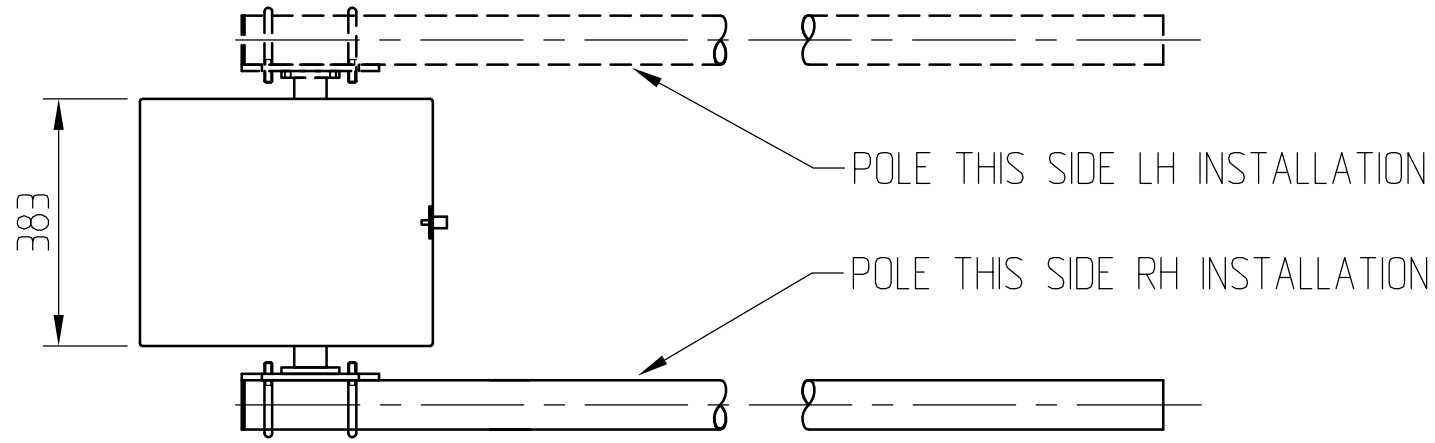

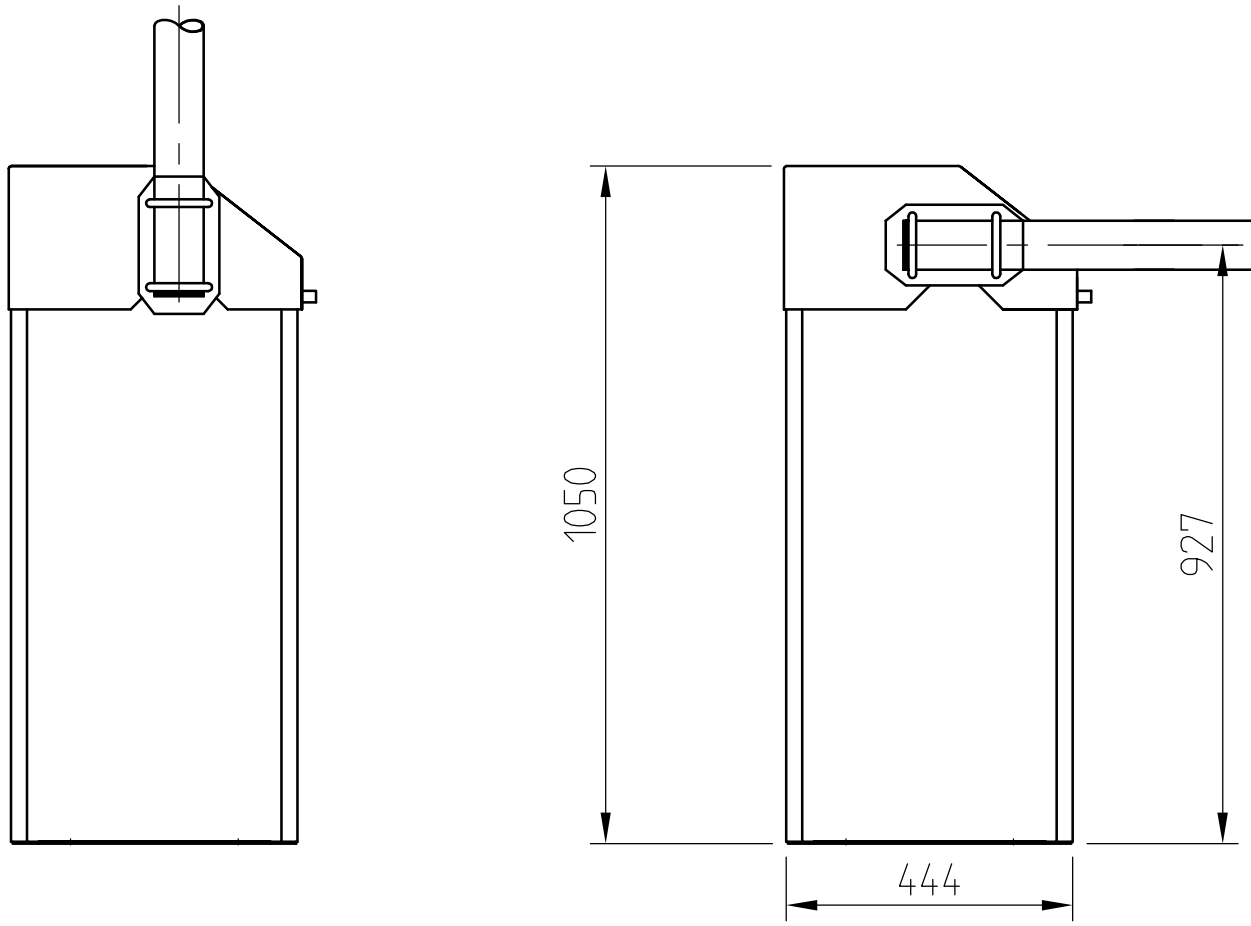

STANDARD BARRIER

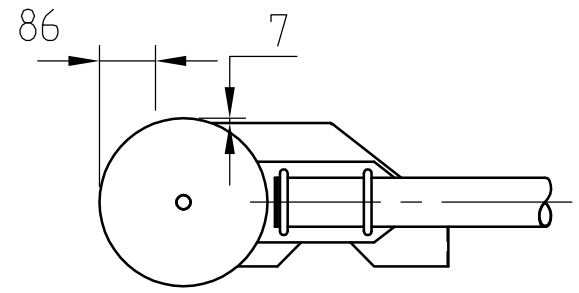

LID WITH BALANCE WEIGHT OPTION

ISSUE	DATE	CHANGE NOTE
-	-	-
A	23.06.04	-

DRAWN	M.KEADY	CHECKED	CERTD.	SCALE N.T.S

PROTECTIVE FINISH
-

TOLERANCES FOR DIMENSIONS
DIMS. SHOWN THUS >449 ±1
DIMS. SHOWN THUS 1. ±0.4
DIMS. SHOWN THUS 1.0 ±0.15
DIMS. SHOWN THUS 1.00 ±0.05
UNLESS OTHERWISE STATED
ALL DIMENSIONS IN MILLIMETRES

MATERIAL
-

STORES REF. -

Clarke Instruments Ltd.

TITLE
MEDIUM DUTY BARRIER WITH SIDE MOUNT

DRG.No. A3
660-204