DRG.No.	902-000
USED ON	

DRAWN TO B.S. 8888

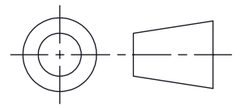

THIRD ANGLE PROJECTION

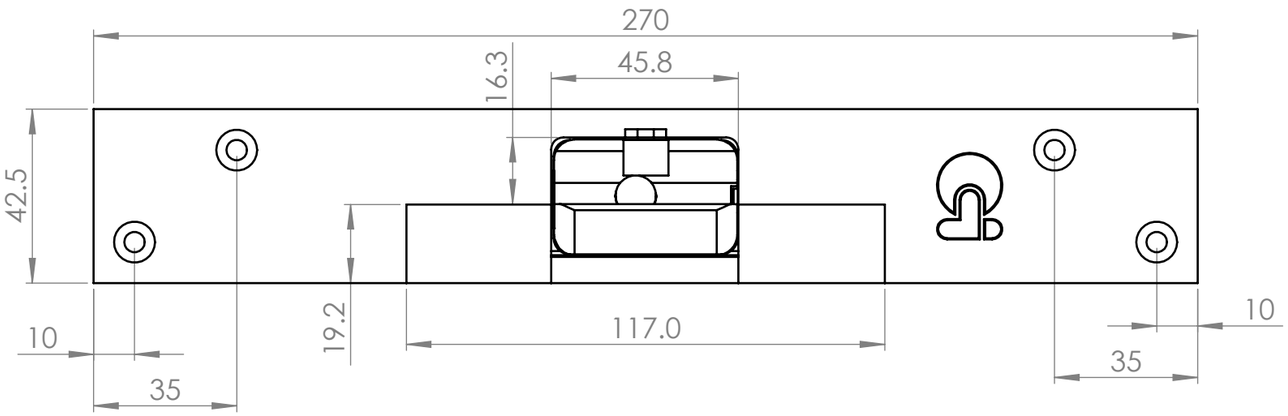

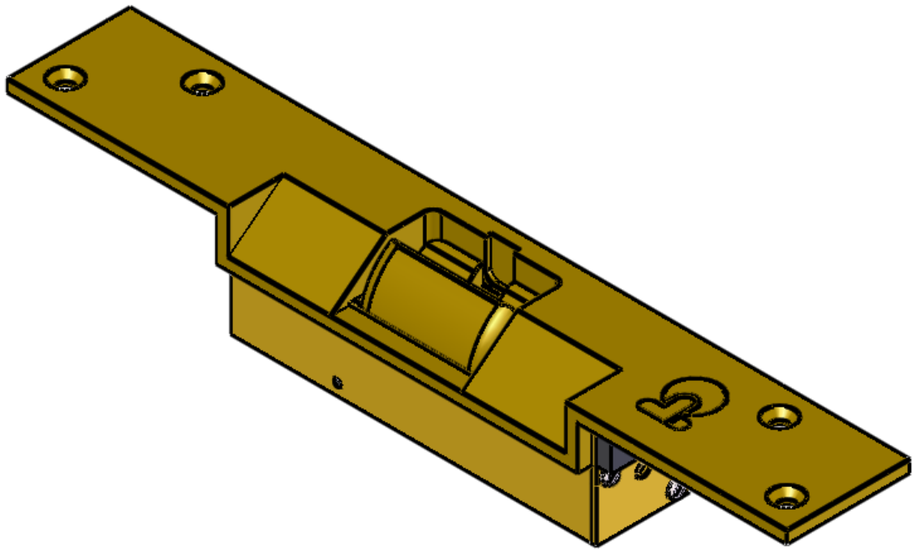

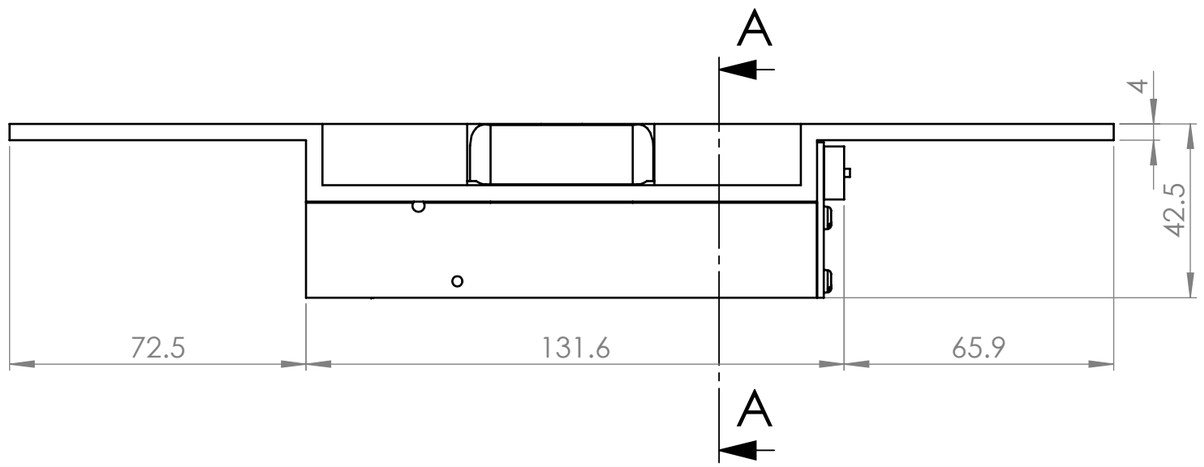

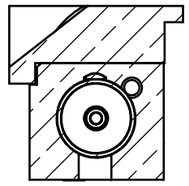

SECTION A-A

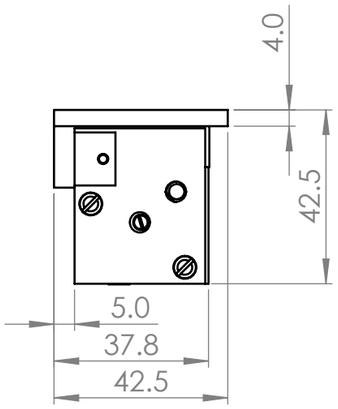

-	-	-		
A		INITIAL ISSUE		
ISSUE	DATE	DESCRIPTION		
DRAWN	MG	CHECKED	CERTD.	SCALE N.T.S

PROTECTIVE FINISH CLEAN
WEIGHT: -

TOLERANCES FOR DIMENSIONS
DIMS. SHOWN THUS >449 ±1
DIMS. SHOWN THUS 1. ±0.4
DIMS. SHOWN THUS 1.0 ±0.15
DIMS. SHOWN THUS 1.00 ±0.05
UNLESS OTHERWISE STATED
ALL DIMENSIONS IN MILLIMETRES

MATERIAL

STORES REF.

Clarke Instruments Ltd.

TITLE

TYPE 9021 GENERAL ASSEMBLY

DRG.No. A3

902-000

SHEET 1 OF 1

09 March 2016 14:43:13