DRG.No. 966-201
USED ON
TYPE 966

DRAWN TO B.S. 308

THIRD ANGLE PROJECTION

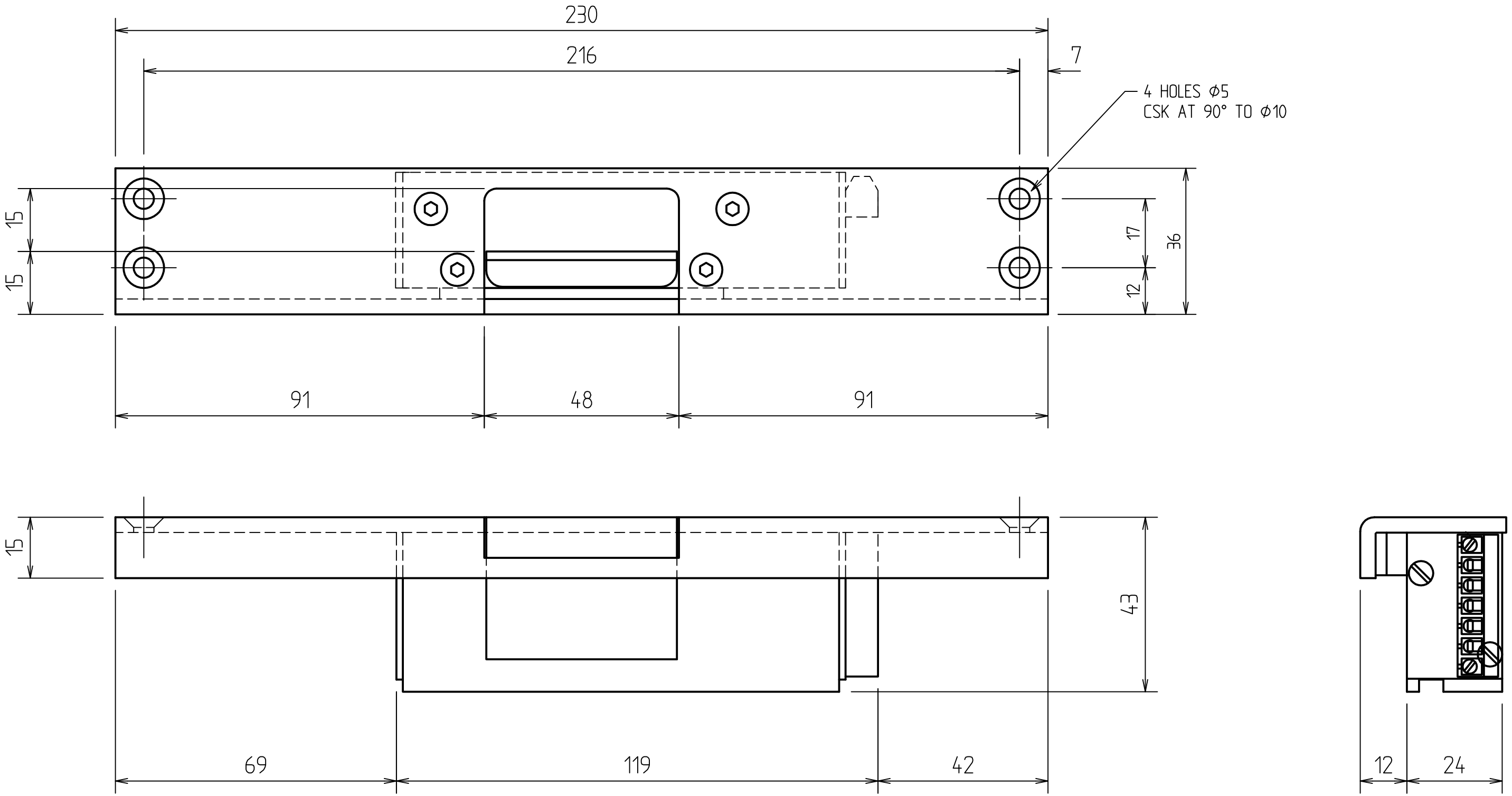

B	1-5-97	-			
ISSUE	DATE	CHANGE NOTE	ISSUE	DATE	CHANGE NOTE
DRAWN	A.R.T.	CHECKED	CERTD.		SCALE 1:1

PROTECTIVE FINISH
-

TOLERANCES FOR DIMENSIONS

DIMS. SHOWN THUS 1. ∩0.4
DIMS. SHOWN THUS 1.0 ∩0.15
DIMS. SHOWN THUS 1.00 ∩0.05
UNLESS OTHERWISE STATED

ALL DIMENSIONS IN MILLIMETRES

MATERIAL
-

STORES REF.

TITLE

TYPE 966 WITH FACEPLATE 13

TYPE No. 966-/13

Clarke Instruments Ltd.

DRG.No. A3

966-201